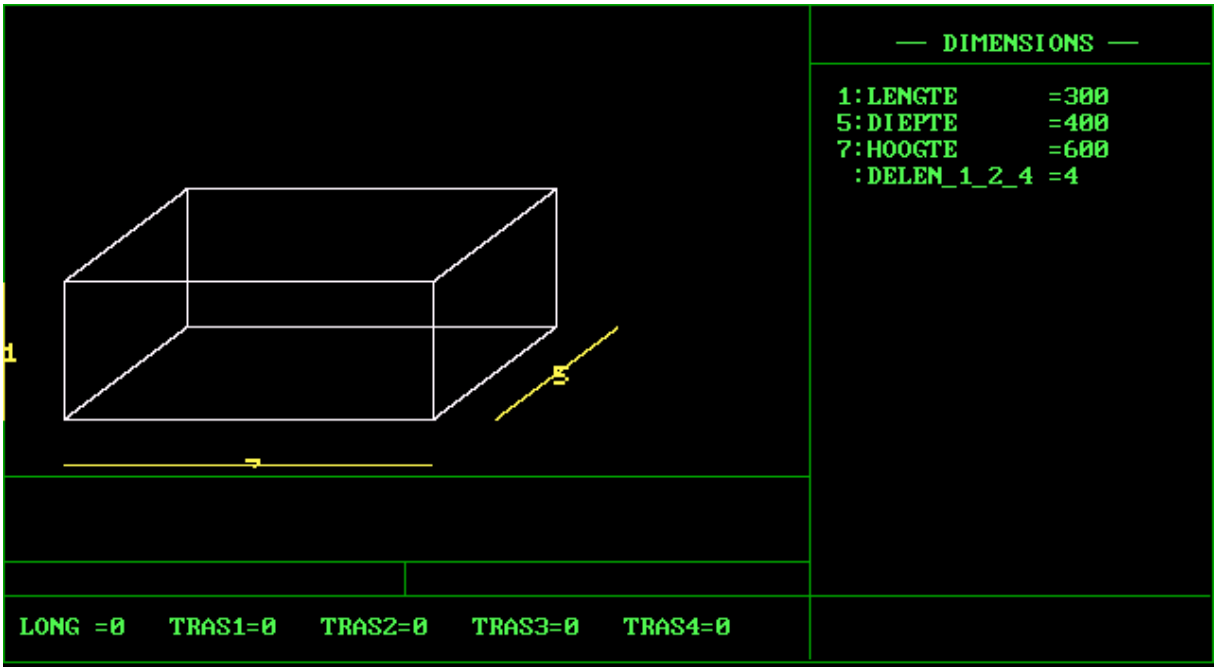
— DIMENSIONS —
1:LENGTE =300
5:DIEPTE =400
7:HOOGTE =600
:DELEN_1_2_4 =4
1
5
7
LONG =0 TRAS1=0 TRAS2=0 TRAS3=0 TRAS4=0

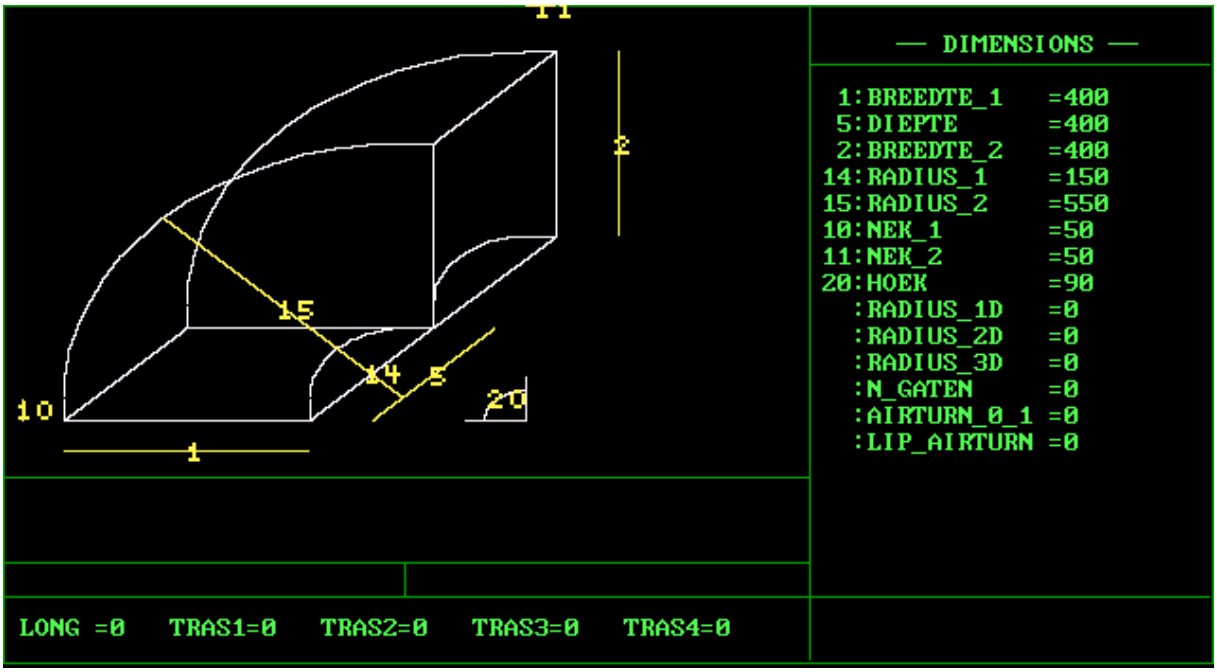
— DIMENSIONS —
1:BREEDTE_1 =400
5:DIEPTE =400
2:BREEDTE_2 =400
14:RADIUS_1 =150
15:RADIUS_2 =550
10:NEK_1 =50
11:NEK_2 =50
20:HOEK =90
:RADIUS_1D =0
:RADIUS_2D =0
:RADIUS_3D =0
:N_GATEN =0
:AIRTURN_0_1 =0
:LIP_AIRTURN =0
11
2
15
14
5
20
10
1
LONG =0 TRAS1=0 TRAS2=0 TRAS3=0 TRAS4=0

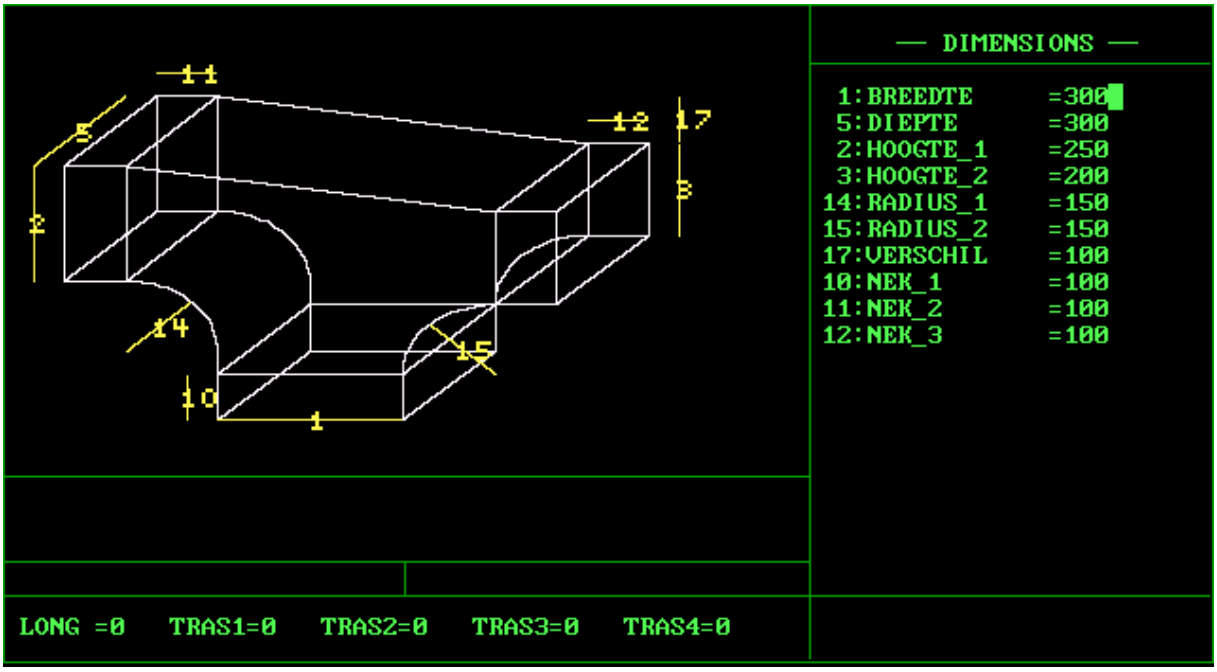
11
5
12
17
3
2
14
15
10
1
— DIMENSIONS —
1:BREEDTE =300
5:DIEPTE =300
2:HOOGTE_1 =250
3:HOOGTE_2 =200
14:RADIUS_1 =150
15:RADIUS_2 =150
17:VERSCHIL =100
10:NEK_1 =100
11:NEK_2 =100
12:NEK_3 =100
LONG =0 TRAS1=0 TRAS2=0 TRAS3=0 TRAS4=0

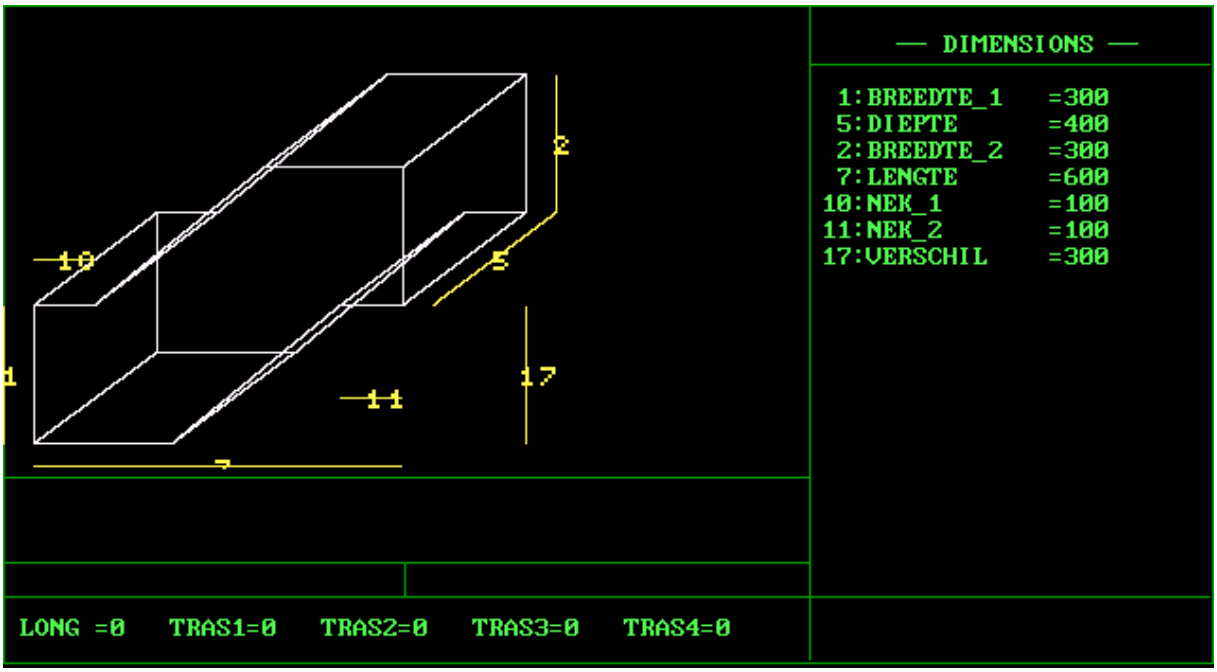
2
10
5
1
11
17
— DIMENSIONS —
1:BREEDTE_1 =300
5:DIEPTE =400
2:BREEDTE_2 =300
7:LENGTE =600
10:NEK_1 =100
11:NEK_2 =100
17:VERSCHIL =300
LONG =0 TRAS1=0 TRAS2=0 TRAS3=0 TRAS4=0

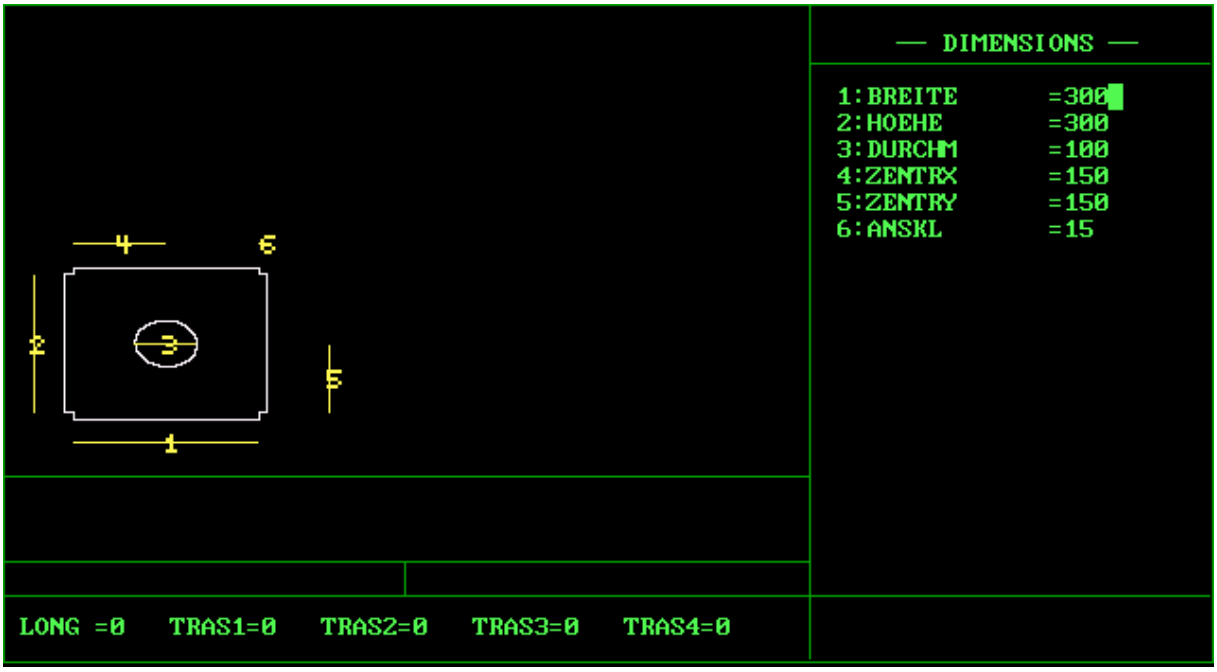
— DIMENSIONS —
1:BREITE =300
2:HOEHE =300
3:DURCHM =100
4:ZENTRX =150
5:ZENTRY =150
6:ANSKL =15
LONG =0 TRAS1=0 TRAS2=0 TRAS3=0 TRAS4=0

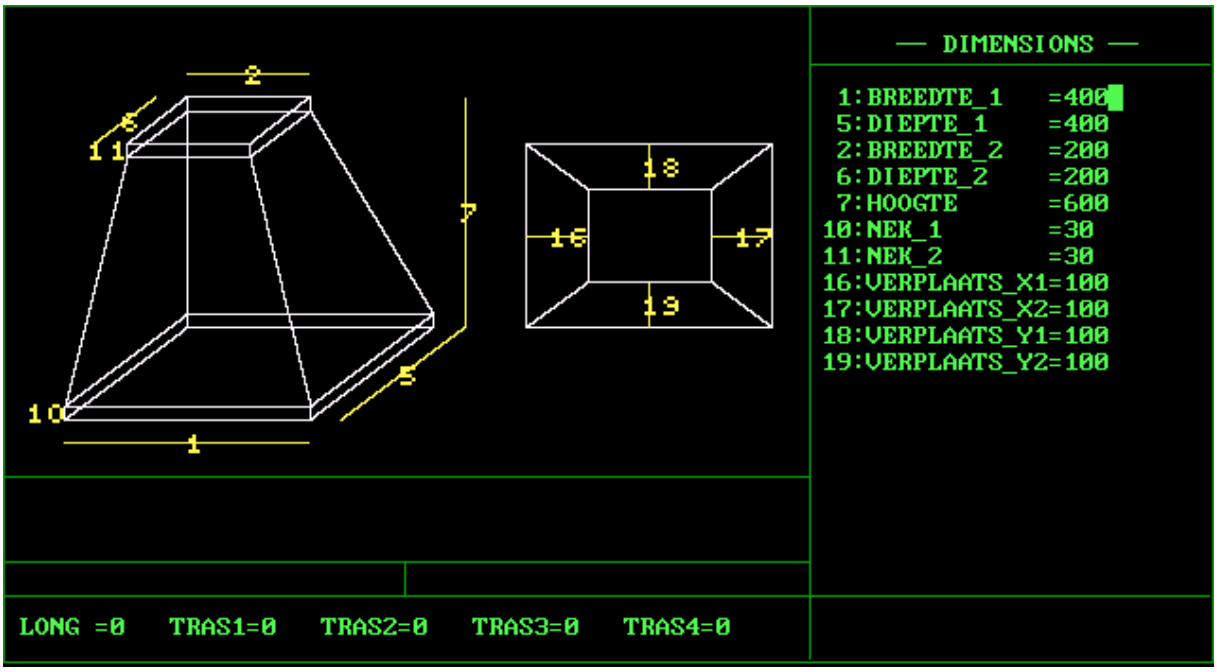
— DIMENSIONS —
1:BREEDTE_1 =400
5:DIEPTE_1 =400
2:BREEDTE_2 =200
6:DIEPTE_2 =200
7:HOOGTE =600
10:NEK_1 =30
11:NEK_2 =30
16:VERPLAATS_X1=100
17:VERPLAATS_X2=100
18:VERPLAATS_Y1=100
19:VERPLAATS_Y2=100
LONG =0 TRAS1=0 TRAS2=0 TRAS3=0 TRAS4=0

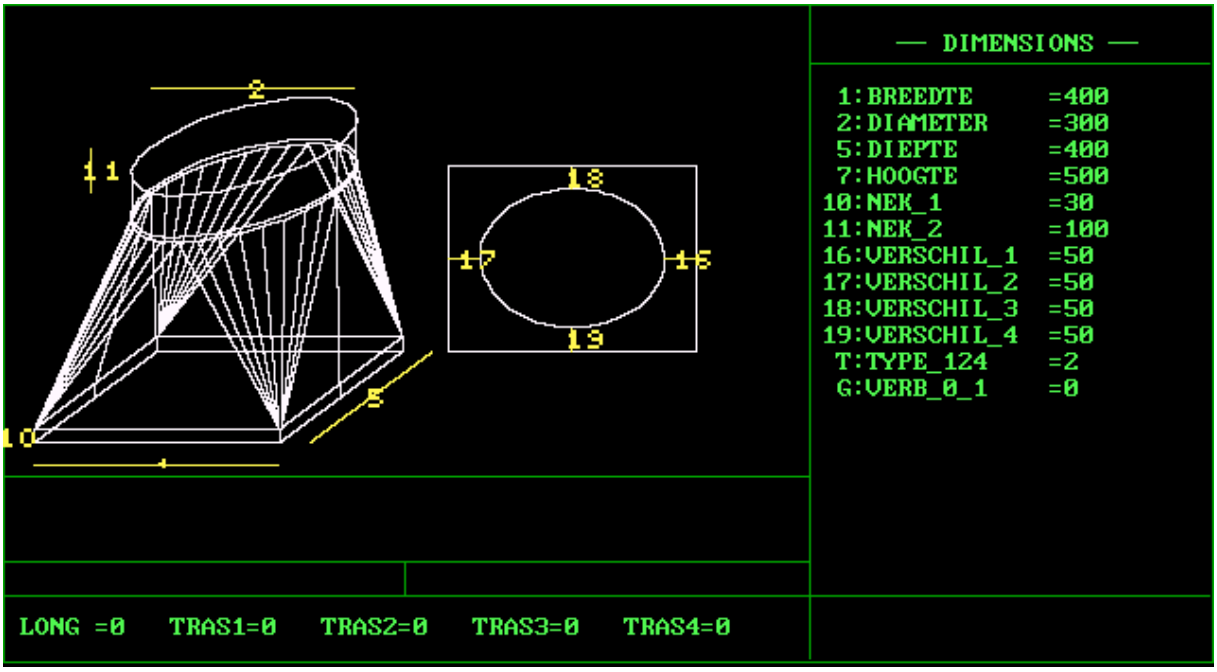
2
11
18
17
16
19
5
10
1
— DIMENSIONS —
1:BREEDTE =400
2:DIAMETER =300
5:DIEPTE =400
7:HOOGTE =500
10:NEK_1 =30
11:NEK_2 =100
16:VERSCHIL_1 =50
17:VERSCHIL_2 =50
18:VERSCHIL_3 =50
19:VERSCHIL_4 =50
T:TYPE_124 =2
G:VERB_0_1 =0
LONG =0 TRAS1=0 TRAS2=0 TRAS3=0 TRAS4=0

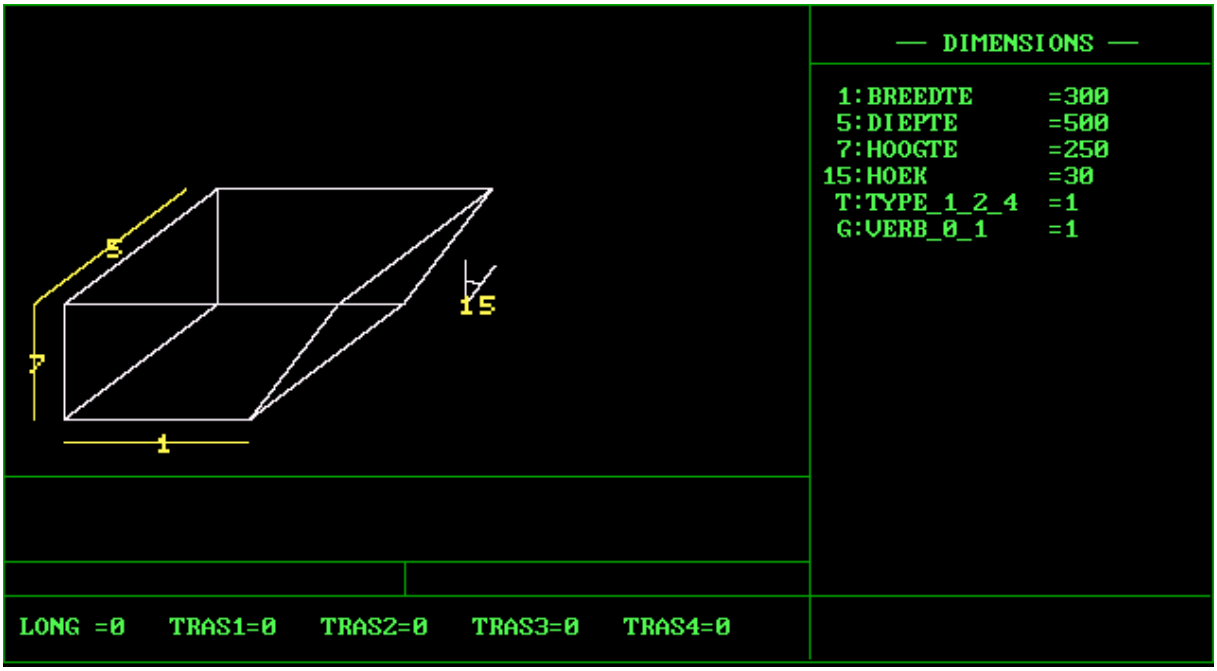
5
15
7
1
— DIMENSIONS —
1:BREEDTE =300
5:DIEPTE =500
7:HOOGTE =250
15:HOEK =30
T:TYPE_1_2_4 =1
G:VERB_0_1 =1
LONG =0 TRAS1=0 TRAS2=0 TRAS3=0 TRAS4=0

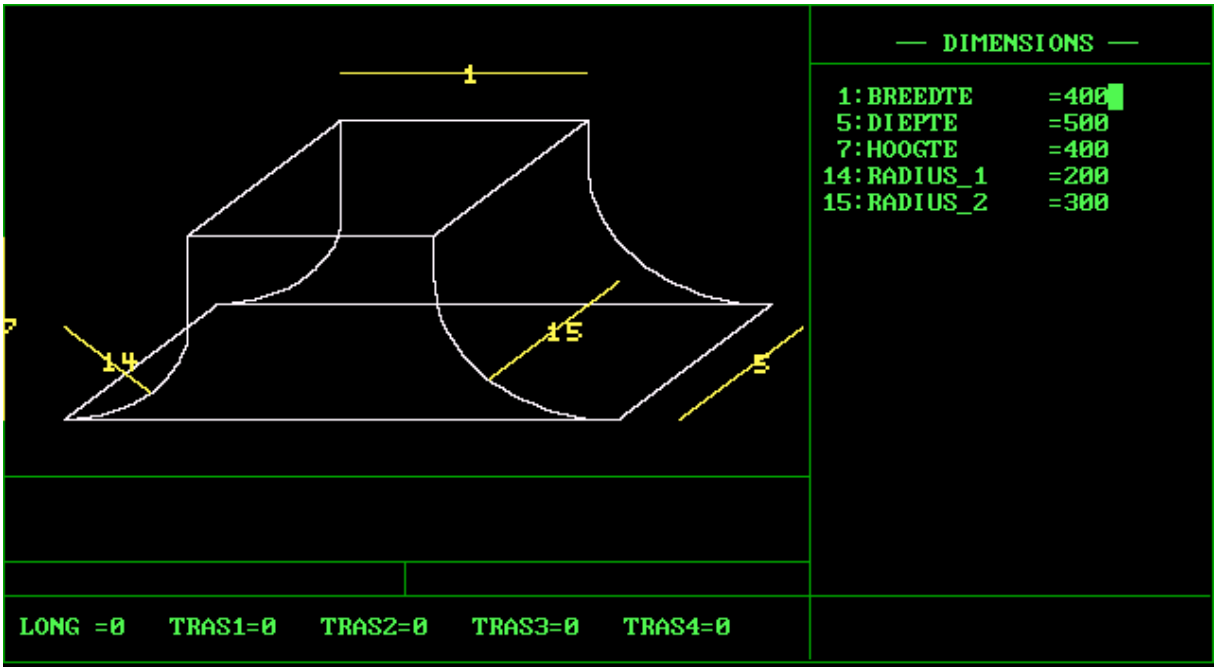
1
14
15
5
— DIMENSIONS —
1:BREEDTE =400
5:DIEPTE =500
7:HOOGTE =400
14:RADIUS_1 =200
15:RADIUS_2 =300
LONG =0 TRAS1=0 TRAS2=0 TRAS3=0 TRAS4=0

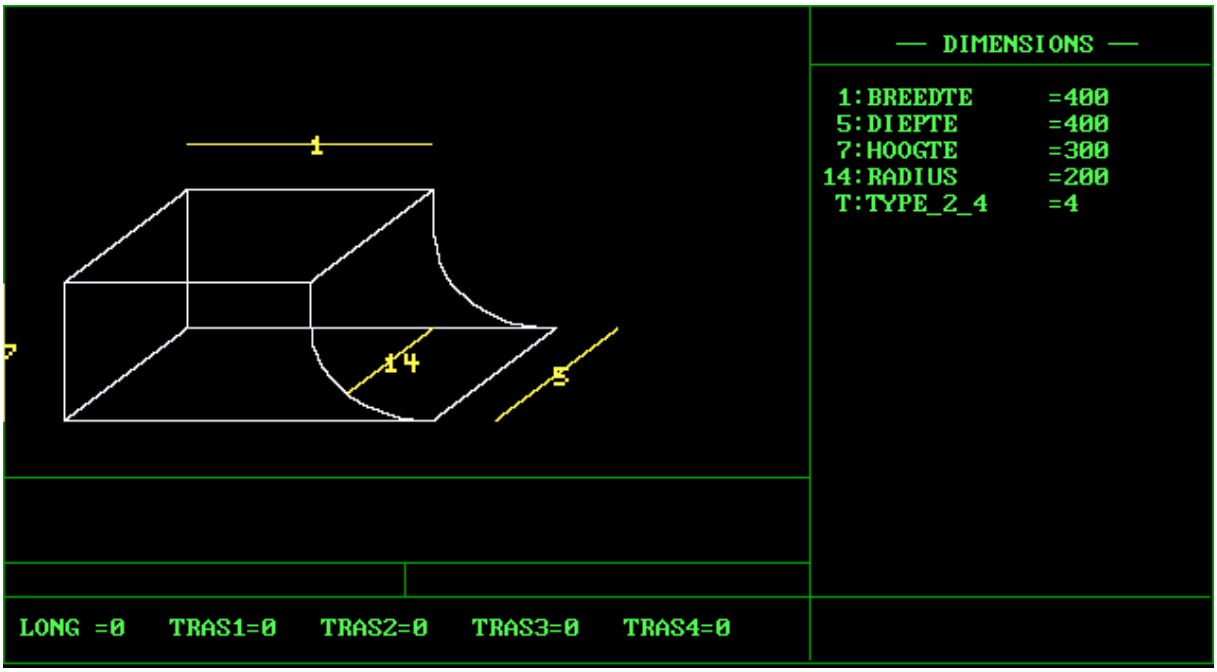
1
14
5
— DIMENSIONS —
1:BREEDTE =400
5:DIEPTE =400
7:HOOGTE =300
14:RADIUS =200
T:TYPE_2_4 =4
LONG =0 TRAS1=0 TRAS2=0 TRAS3=0 TRAS4=0

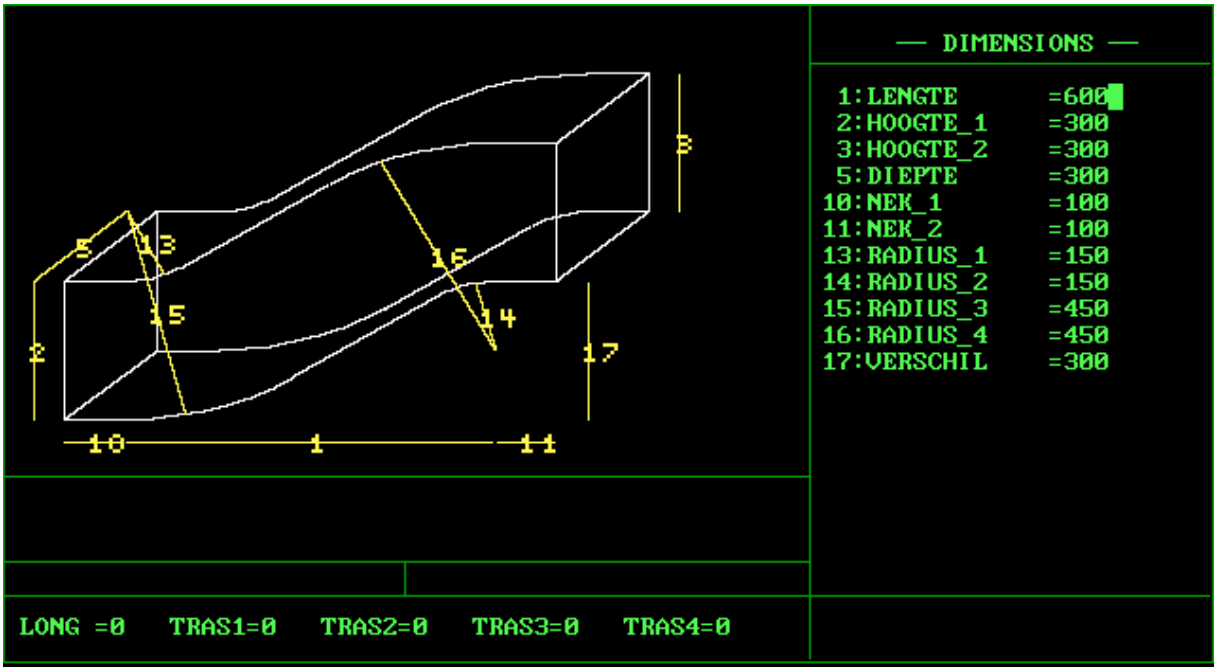
— DIMENSIONS —
1:LENGTE =600
2:HOOGTE_1 =300
3:HOOGTE_2 =300
5:DIEPTE =300
10:NEK_1 =100
11:NEK_2 =100
13:RADIUS_1 =150
14:RADIUS_2 =150
15:RADIUS_3 =450
16:RADIUS_4 =450
17:VERSCHIL =300
LONG =0 TRAS1=0 TRAS2=0 TRAS3=0 TRAS4=0

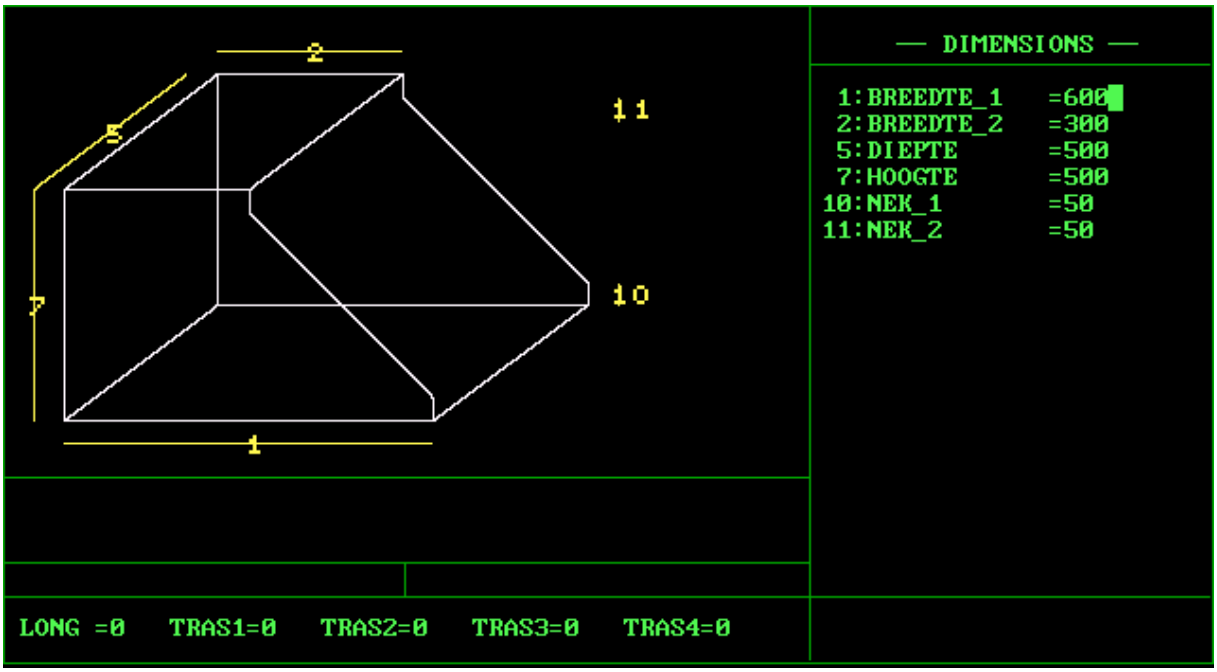
— DIMENSIONS —
1:BREEDTE_1 =600
2:BREEDTE_2 =300
5:DIEPTE =500
7:HOOGTE =500
10:NEK_1 =50
11:NEK_2 =50
LONG =0 TRAS1=0 TRAS2=0 TRAS3=0 TRAS4=0

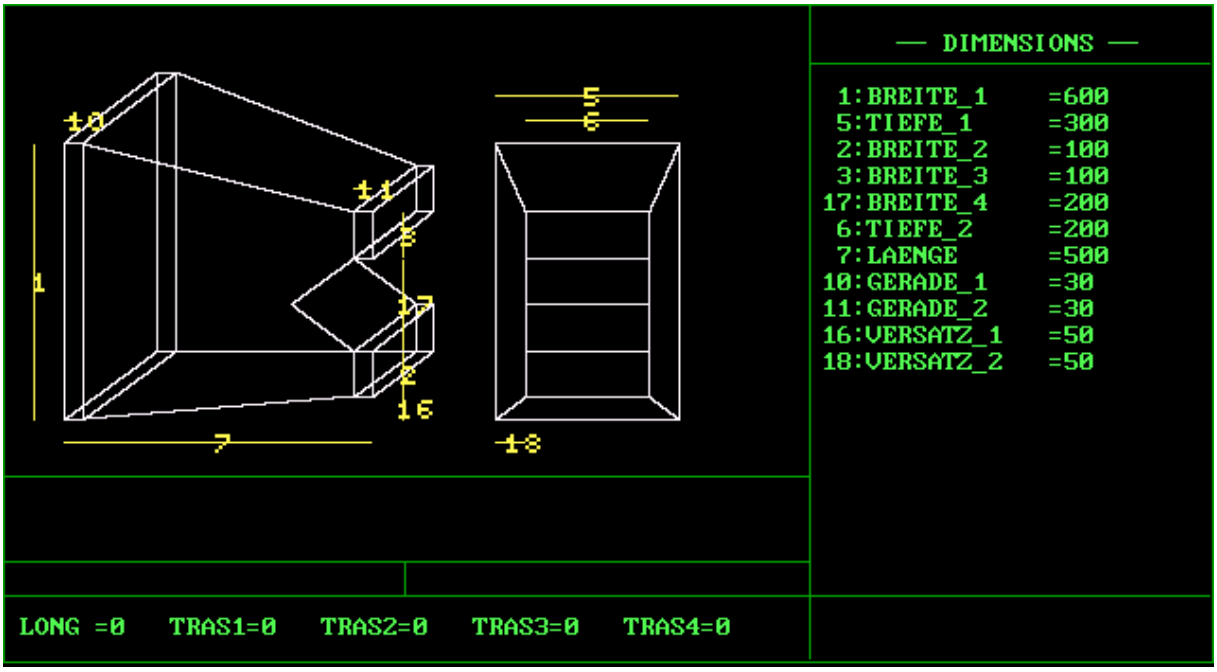
— DIMENSIONS —
1:BREITE_1 =600
5:TIEFE_1 =300
2:BREITE_2 =100
3:BREITE_3 =100
17:BREITE_4 =200
6:TIEFE_2 =200
7:LAENGE =500
10:GERADE_1 =30
11:GERADE_2 =30
16:VERSATZ_1 =50
18:VERSATZ_2 =50
LONG =0 TRAS1=0 TRAS2=0 TRAS3=0 TRAS4=0

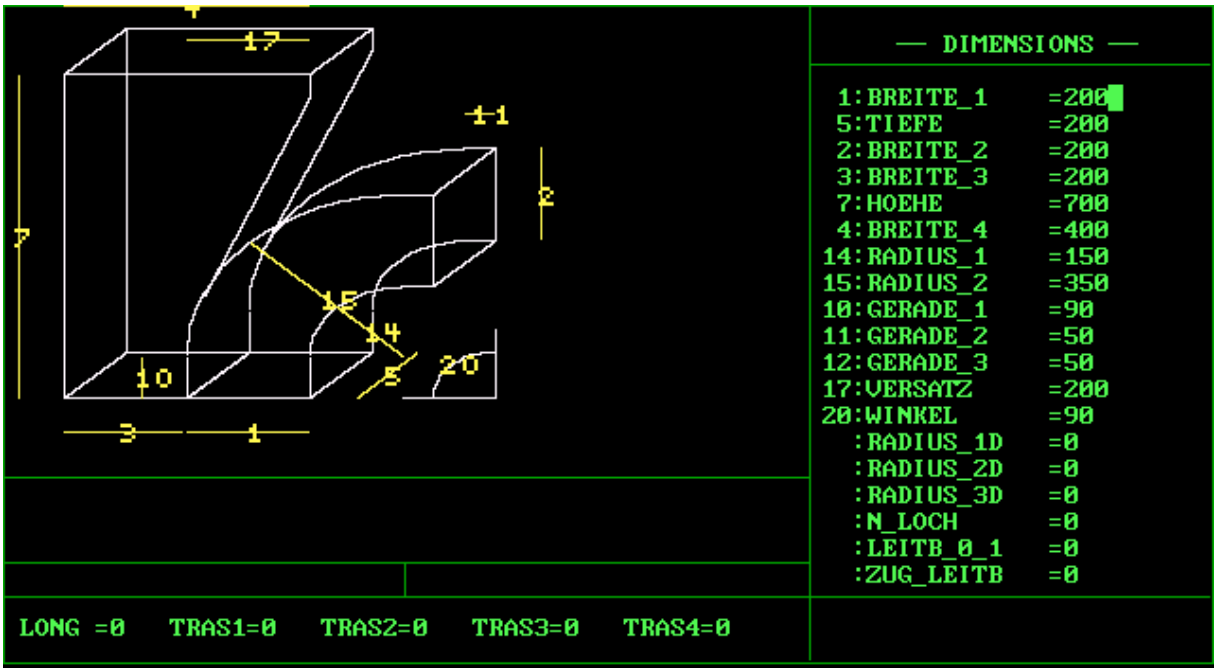
— DIMENSIONS —
1:BREITE_1 =200
5:TIEFE =200
2:BREITE_2 =200
3:BREITE_3 =200
7:HOEHE =700
4:BREITE_4 =400
14:RADIUS_1 =150
15:RADIUS_2 =350
10:GERADE_1 =90
11:GERADE_2 =50
12:GERADE_3 =50
17:VERSATZ =200
20:WINKEL =90
:RADIUS_1D =0
:RADIUS_2D =0
:RADIUS_3D =0
:N_LOCH =0
:LEITB_0_1 =0
:ZUG_LEITB =0
LONG =0 TRAS1=0 TRAS2=0 TRAS3=0 TRAS4=0

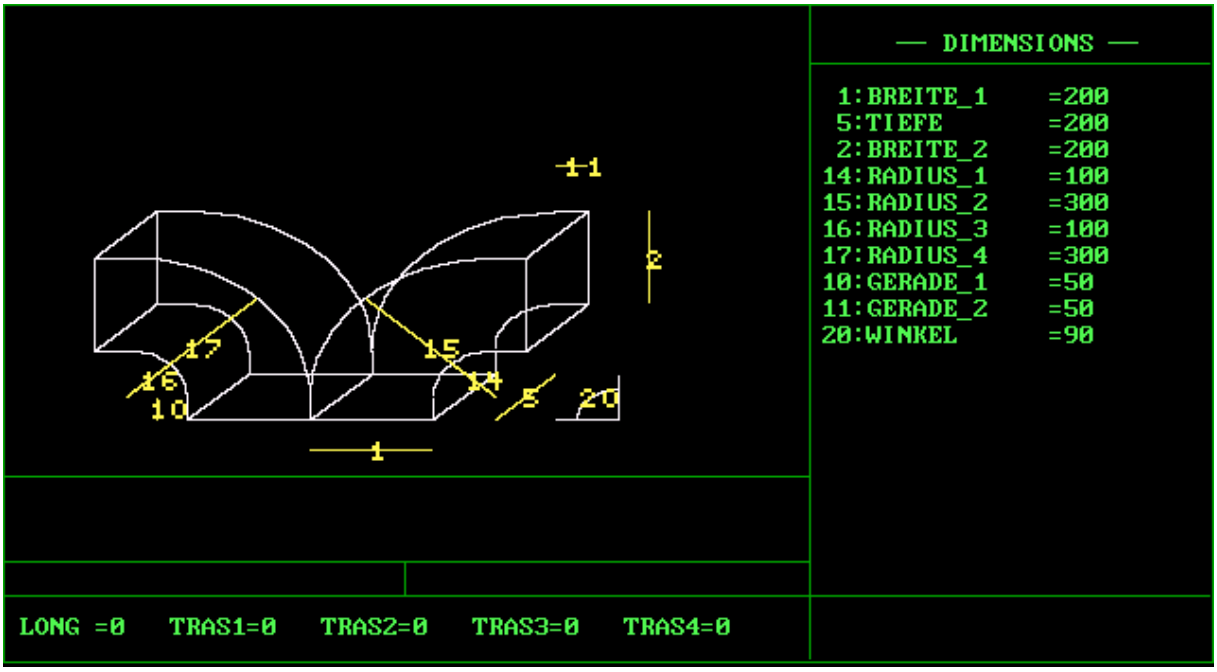
11
2
17
15
16
14
10
5
20
1
— DIMENSIONS —
1:BREITE_1 =200
5:TIEFE =200
2:BREITE_2 =200
14:RADIUS_1 =100
15:RADIUS_2 =300
16:RADIUS_3 =100
17:RADIUS_4 =300
10:GERADE_1 =50
11:GERADE_2 =50
20:WINKEL =90
LONG =0 TRAS1=0 TRAS2=0 TRAS3=0 TRAS4=0

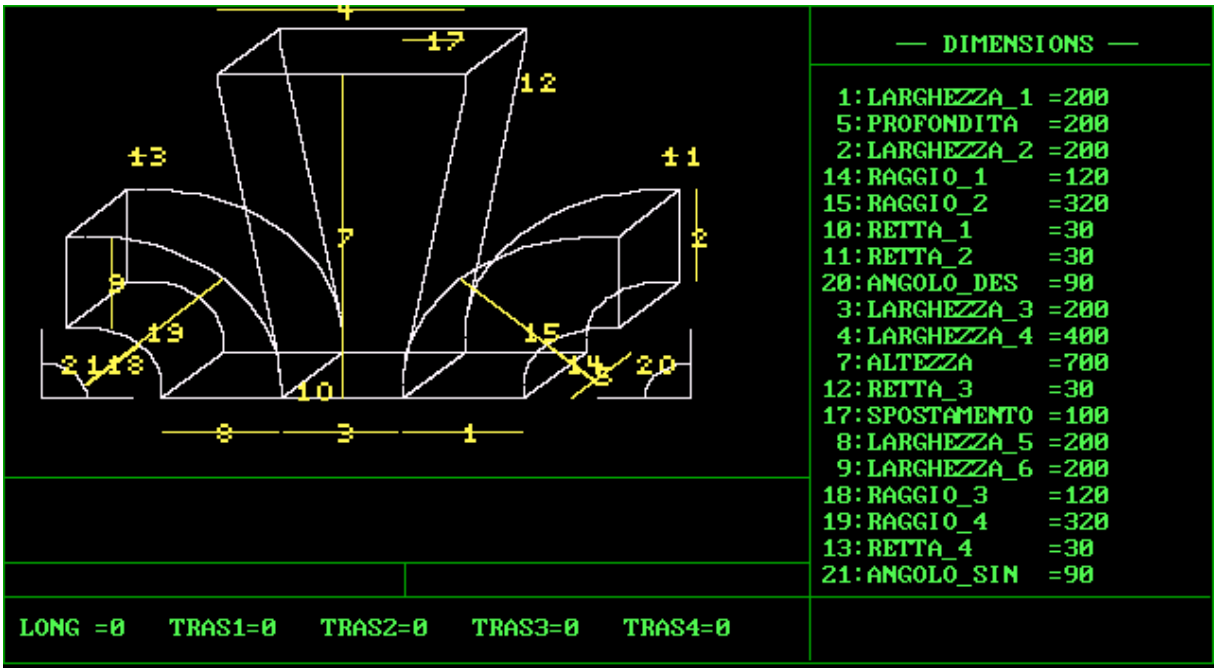
4
17
12
13
11
7
2
9
19
15
21
18
14
20
10
8
3
1
— DIMENSIONS —
1:LARGHEZZA_1 =200
5:PROFONDITA =200
2:LARGHEZZA_2 =200
14:RAGGIO_1 =120
15:RAGGIO_2 =320
10:RETTA_1 =30
11:RETTA_2 =30
20:ANGOLO_DES =90
3:LARGHEZZA_3 =200
4:LARGHEZZA_4 =400
7:ALTEZZA =700
12:RETTA_3 =30
17:SPOSTAMENTO =100
8:LARGHEZZA_5 =200
9:LARGHEZZA_6 =200
18:RAGGIO_3 =120
19:RAGGIO_4 =320
13:RETTA_4 =30
21:ANGOLO_SIN =90
LONG =0 TRAS1=0 TRAS2=0 TRAS3=0 TRAS4=0

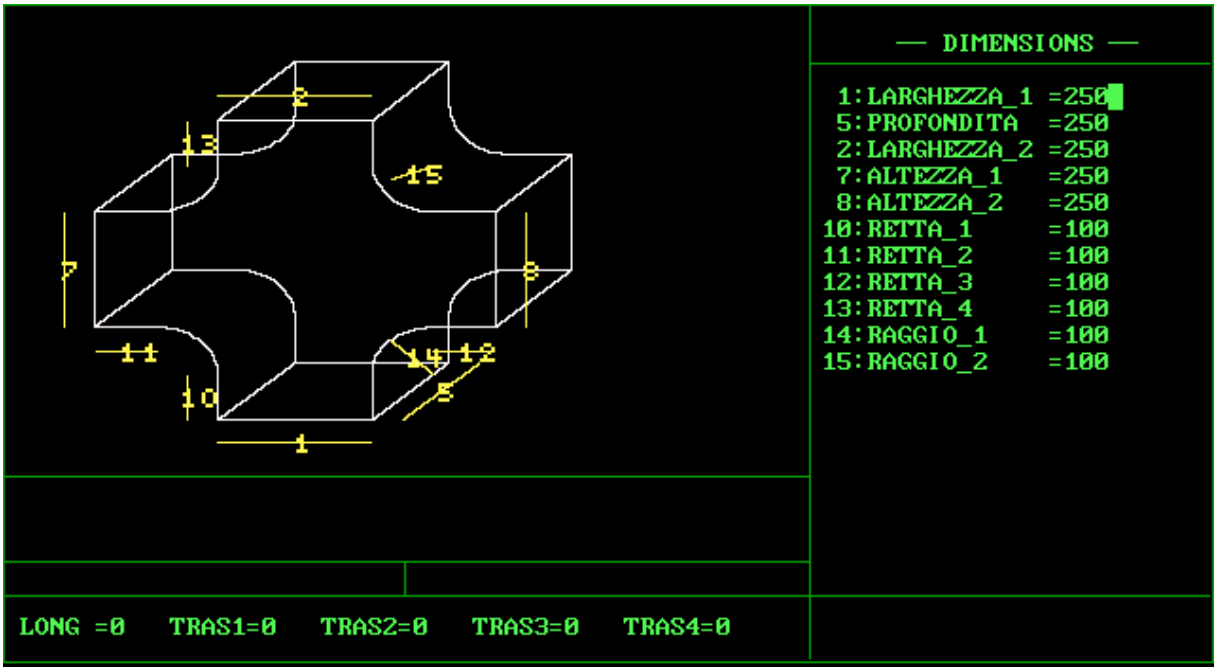
2
13
15
7
8
11
14
12
10
5
1
— DIMENSIONS —
1:LARGHEZZA_1 =250
5:PROFONDITA =250
2:LARGHEZZA_2 =250
7:ALTEZZA_1 =250
8:ALTEZZA_2 =250
10:RETTA_1 =100
11:RETTA_2 =100
12:RETTA_3 =100
13:RETTA_4 =100
14:RAGGIO_1 =100
15:RAGGIO_2 =100
LONG =0 TRAS1=0 TRAS2=0 TRAS3=0 TRAS4=0

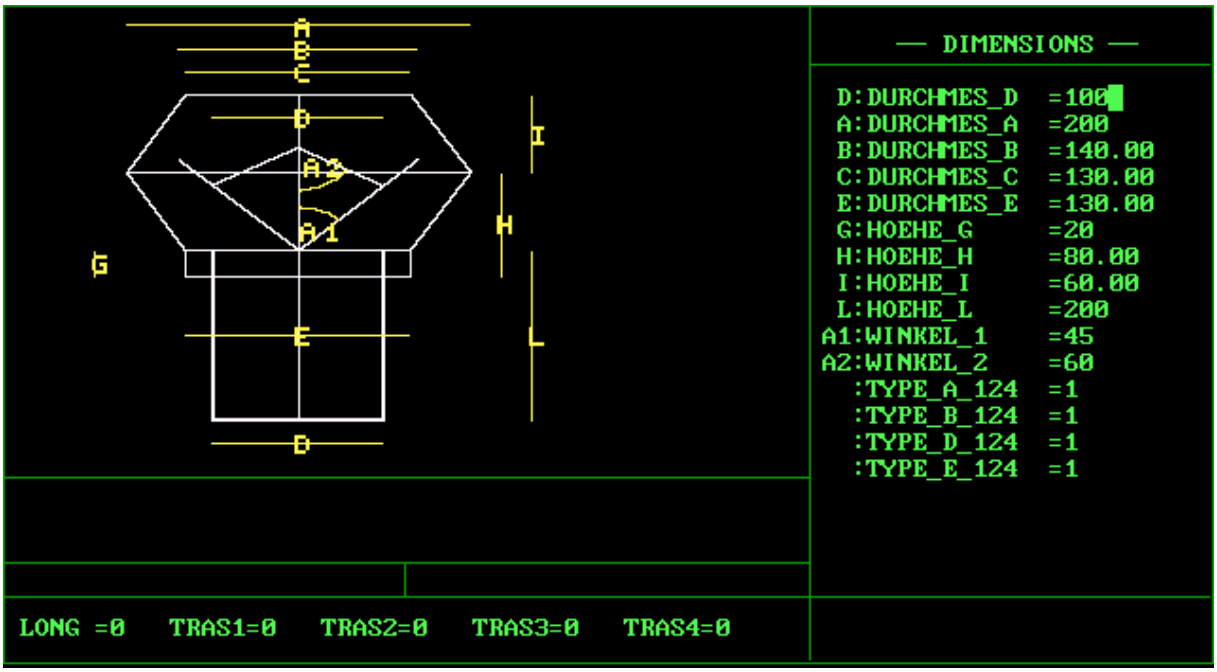
A
B
C
D
I
A2
A1
H
G
E
L
D
— DIMENSIONS —
D:DURCHMES_D =100
A:DURCHMES_A =200
B:DURCHMES_B =140.00
C:DURCHMES_C =130.00
E:DURCHMES_E =130.00
G:HOEHE_G =20
H:HOEHE_H =80.00
I:HOEHE_I =60.00
L:HOEHE_L =200
A1:WINKEL_1 =45
A2:WINKEL_2 =60
:TYPE_A_124 =1
:TYPE_B_124 =1
:TYPE_D_124 =1
:TYPE_E_124 =1
LONG =0 TRAS1=0 TRAS2=0 TRAS3=0 TRAS4=0

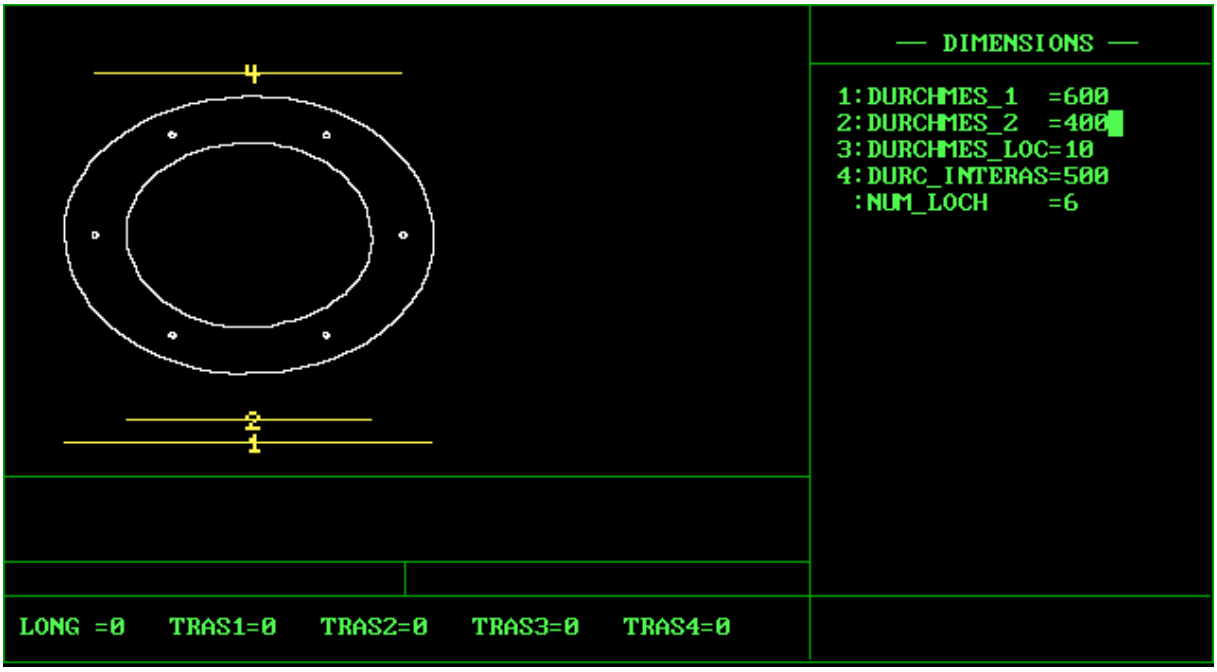
— DIMENSIONS —
1:DURCHMES_1 =600
2:DURCHMES_2 =400
3:DURCHMES_LOC=10
4:DURC_INTERAS=500
:NUM_LOCH =6
LONG =0 TRAS1=0 TRAS2=0 TRAS3=0 TRAS4=0

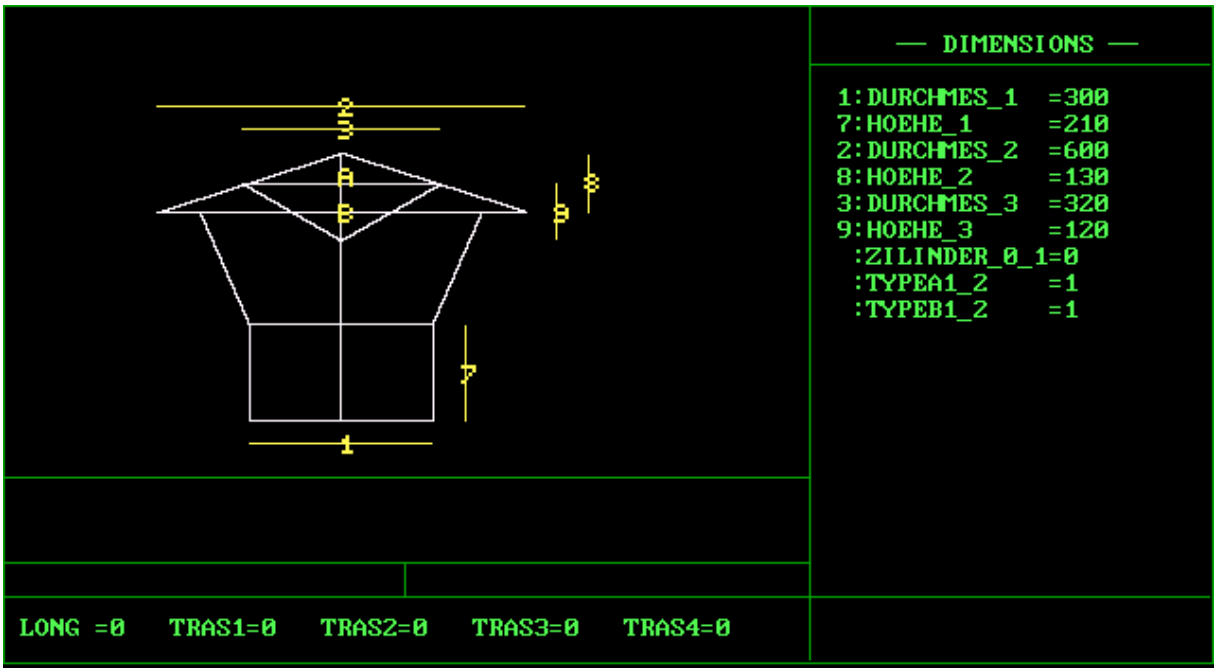
— DIMENSIONS —
1:DURCHMES_1 =300
7:HOEHE_1 =210
2:DURCHMES_2 =600
8:HOEHE_2 =130
3:DURCHMES_3 =320
9:HOEHE_3 =120
:ZILINDER_0_1=0
:TYPEA1_2 =1
:TYPEB1_2 =1
LONG =0 TRAS1=0 TRAS2=0 TRAS3=0 TRAS4=0

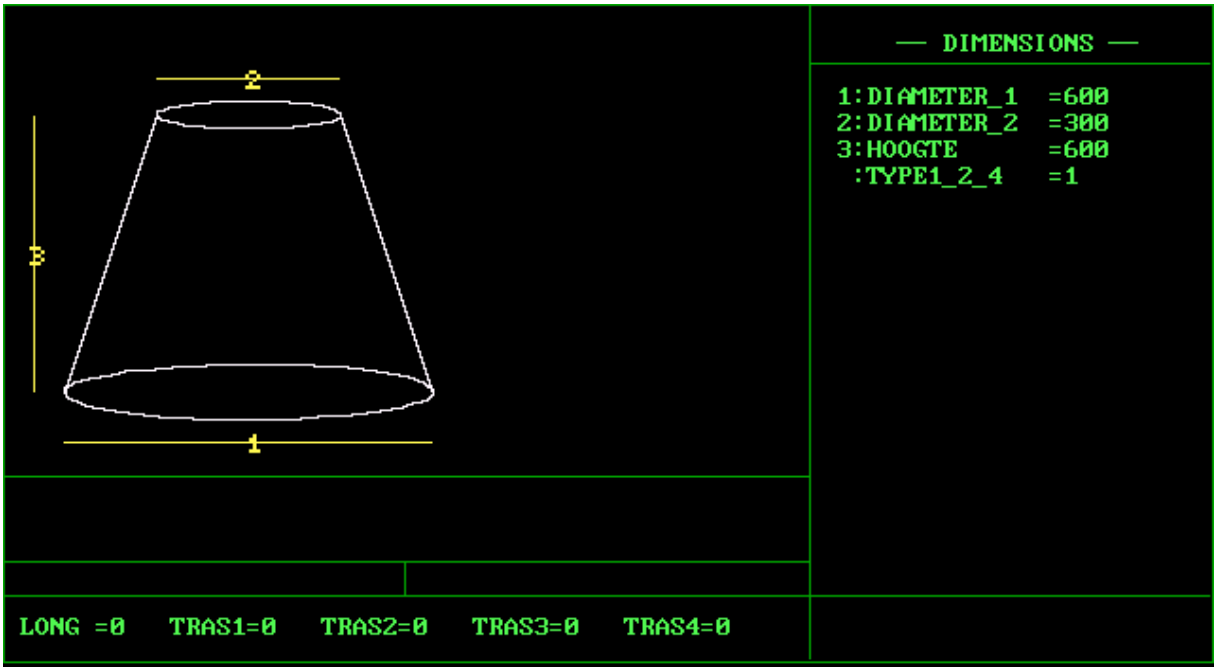
2
3
1
— DIMENSIONS —
1:DIAMETER_1 =600
2:DIAMETER_2 =300
3:HOOGTE =600
:TYPE1_2_4 =1
LONG =0 TRAS1=0 TRAS2=0 TRAS3=0 TRAS4=0

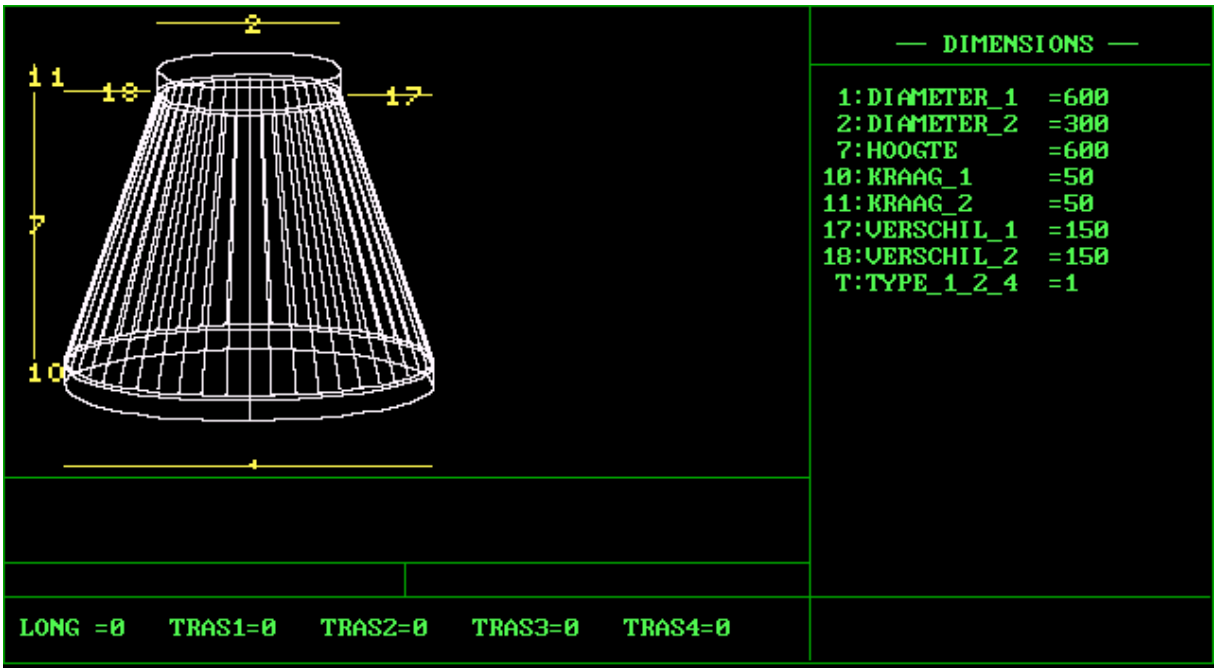
2
11
18
17
7
10
1
— DIMENSIONS —
1:DIAMETER_1 =600
2:DIAMETER_2 =300
7:HOOGTE =600
10:KRAAG_1 =50
11:KRAAG_2 =50
17:VERSCHIL_1 =150
18:VERSCHIL_2 =150
T:TYPE_1_2_4 =1
LONG =0 TRAS1=0 TRAS2=0 TRAS3=0 TRAS4=0

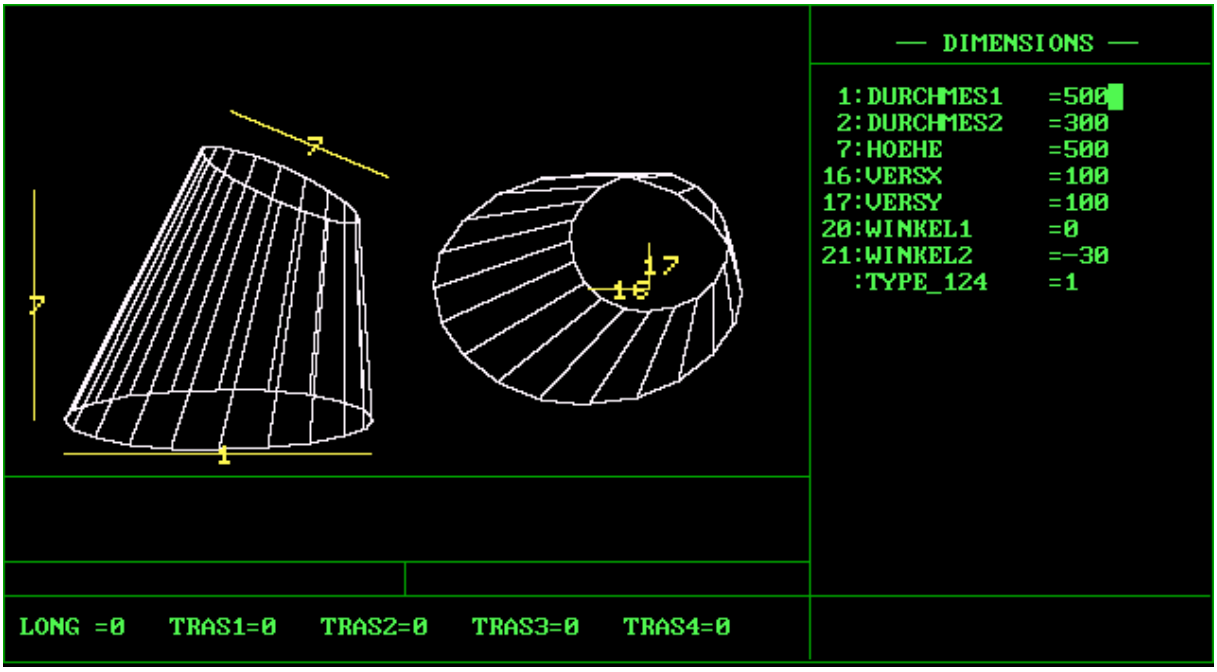
— DIMENSIONS —
1:DURCHMES1 =500
2:DURCHMES2 =300
7:HOEHE =500
16:VERSX =100
17:VERSY =100
20:WINKEL1 =0
21:WINKEL2 =-30
:TYPE_124 =1
LONG =0 TRAS1=0 TRAS2=0 TRAS3=0 TRAS4=0

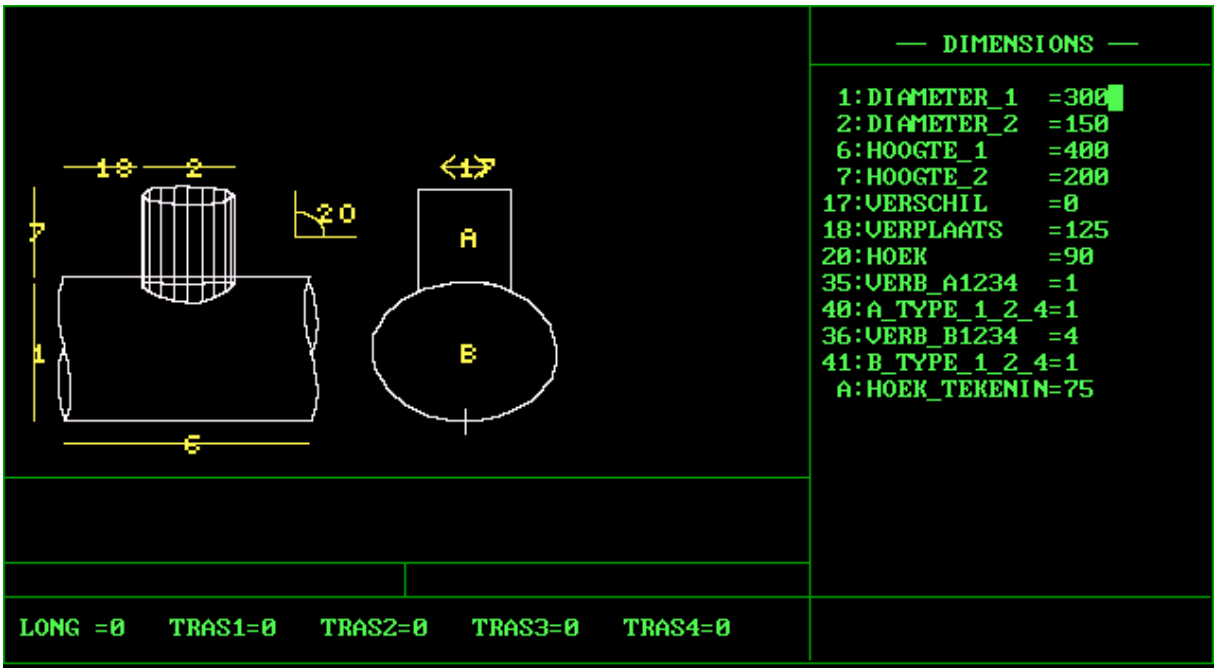
— DIMENSIONS —
1:DIAMETER_1 =300
2:DIAMETER_2 =150
6:HOOGTE_1 =400
7:HOOGTE_2 =200
17:VERSCHIL =0
18:VERPLAATS =125
20:HOEK =90
35:VERB_A1234 =1
40:A_TYPE_1_2_4=1
36:VERB_B1234 =4
41:B_TYPE_1_2_4=1
A:HOEK_TEKENIN=75
A
B
LONG =0 TRAS1=0 TRAS2=0 TRAS3=0 TRAS4=0

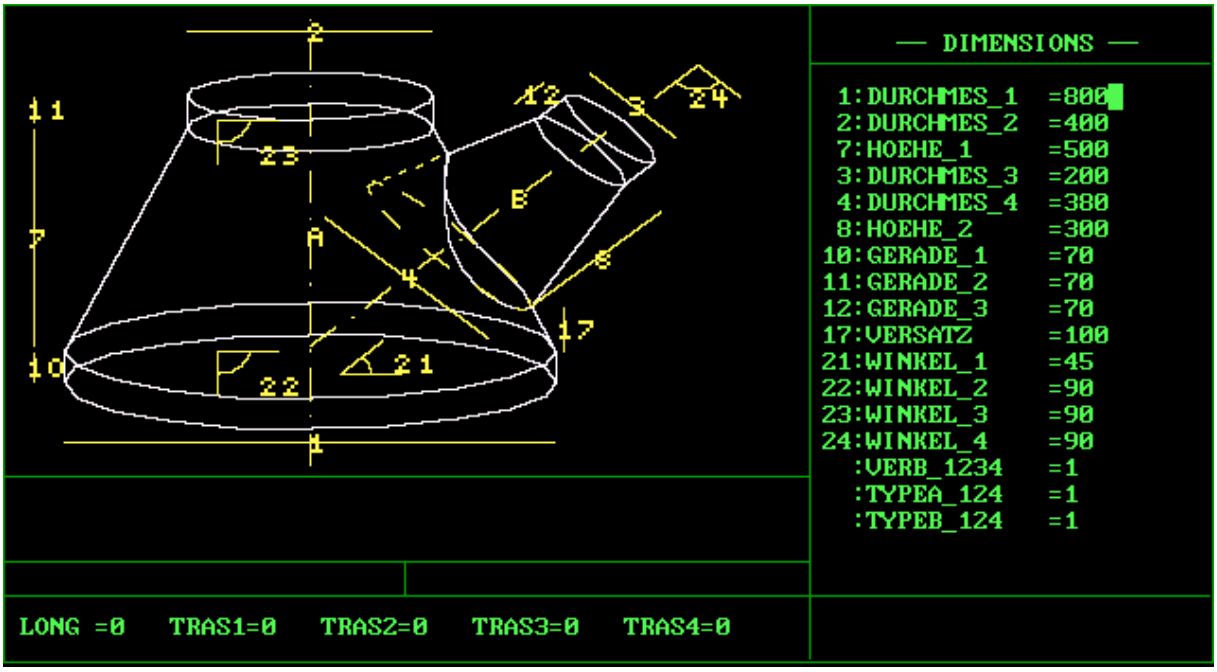
— DIMENSIONS —
1:DURCHMES_1 =800
2:DURCHMES_2 =400
7:HOEHE_1 =500
3:DURCHMES_3 =200
4:DURCHMES_4 =380
8:HOEHE_2 =300
10:GERADE_1 =70
11:GERADE_2 =70
12:GERADE_3 =70
17:VERSATZ =100
21:WINKEL_1 =45
22:WINKEL_2 =90
23:WINKEL_3 =90
24:WINKEL_4 =90
:VERB_1234 =1
:TYPEA_124 =1
:TYPEB_124 =1
LONG =0 TRAS1=0 TRAS2=0 TRAS3=0 TRAS4=0

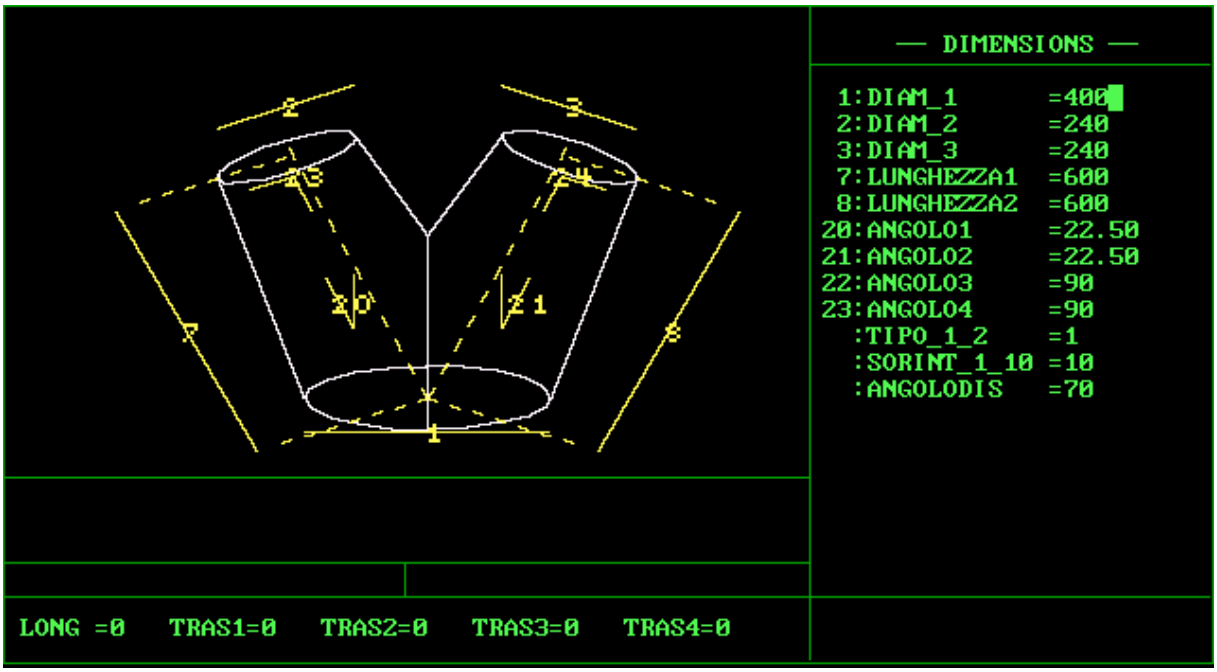
— DIMENSIONS —
1:DIAM_1 =400
2:DIAM_2 =240
3:DIAM_3 =240
7:LUNGHEZZA1 =600
8:LUNGHEZZA2 =600
20:ANGOLO1 =22.50
21:ANGOLO2 =22.50
22:ANGOLO3 =90
23:ANGOLO4 =90
:TIPO_1_2 =1
:SORINT_1_10 =10
:ANGOLODIS =70
LONG =0 TRAS1=0 TRAS2=0 TRAS3=0 TRAS4=0

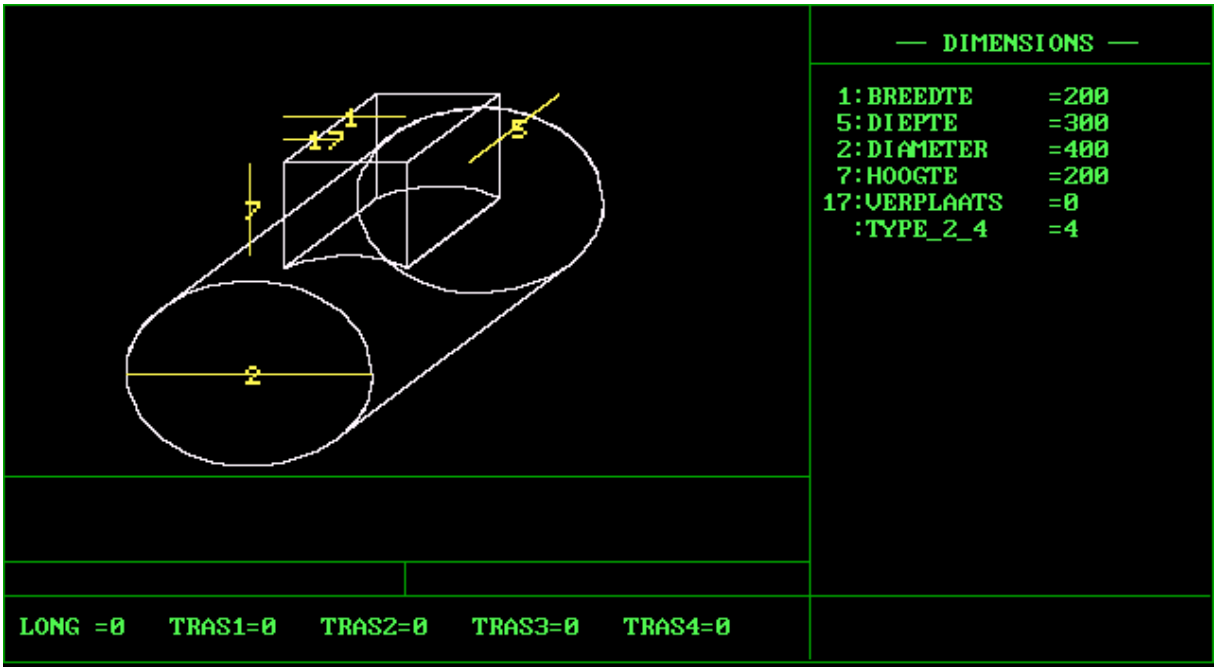
— DIMENSIONS —
1:BREEDTE =200
5:DIEPTE =300
2:DIAMETER =400
7:HOOGTE =200
17:VERPLAATS =0
:TYPE_2_4 =4
LONG =0 TRAS1=0 TRAS2=0 TRAS3=0 TRAS4=0

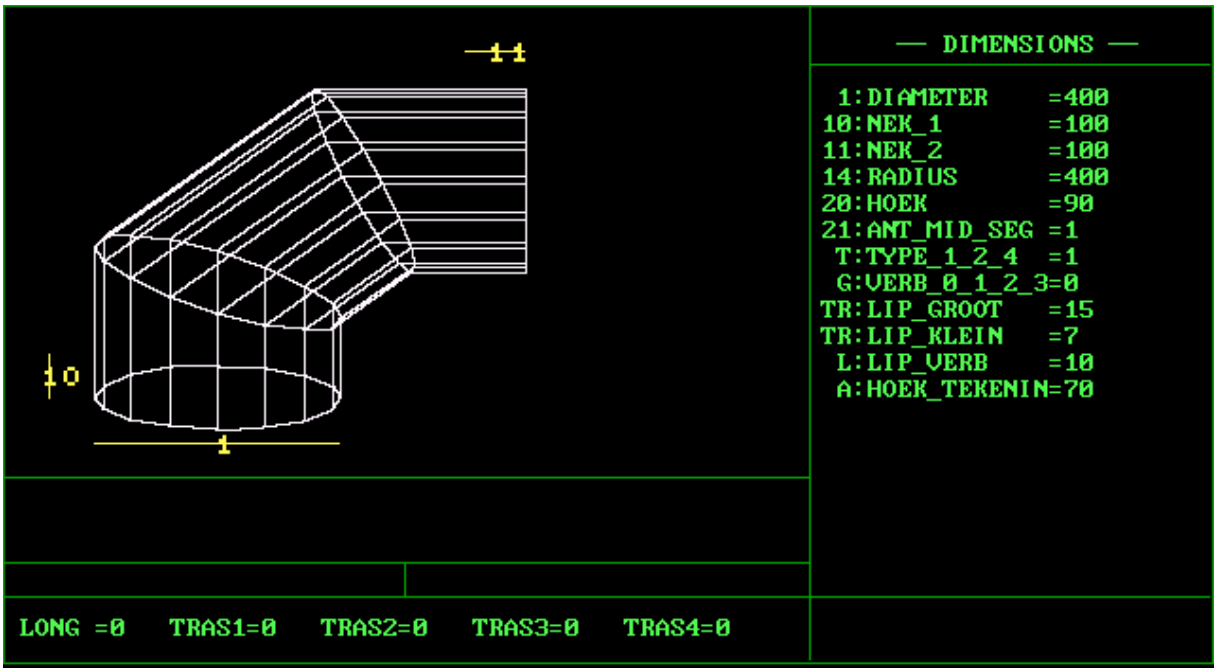
— DIMENSIONS —
1:DIAMETER =400
10:NEK_1 =100
11:NEK_2 =100
14:RADIUS =400
20:HOEK =90
21:ANT_MID_SEG =1
T:TYPE_1_2_4 =1
G:VERB_0_1_2_3=0
TR:LIP_GROOT =15
TR:LIP_KLEIN =7
L:LIP_VERB =10
A:HOEK_TEKENIN=70
LONG =0 TRAS1=0 TRAS2=0 TRAS3=0 TRAS4=0

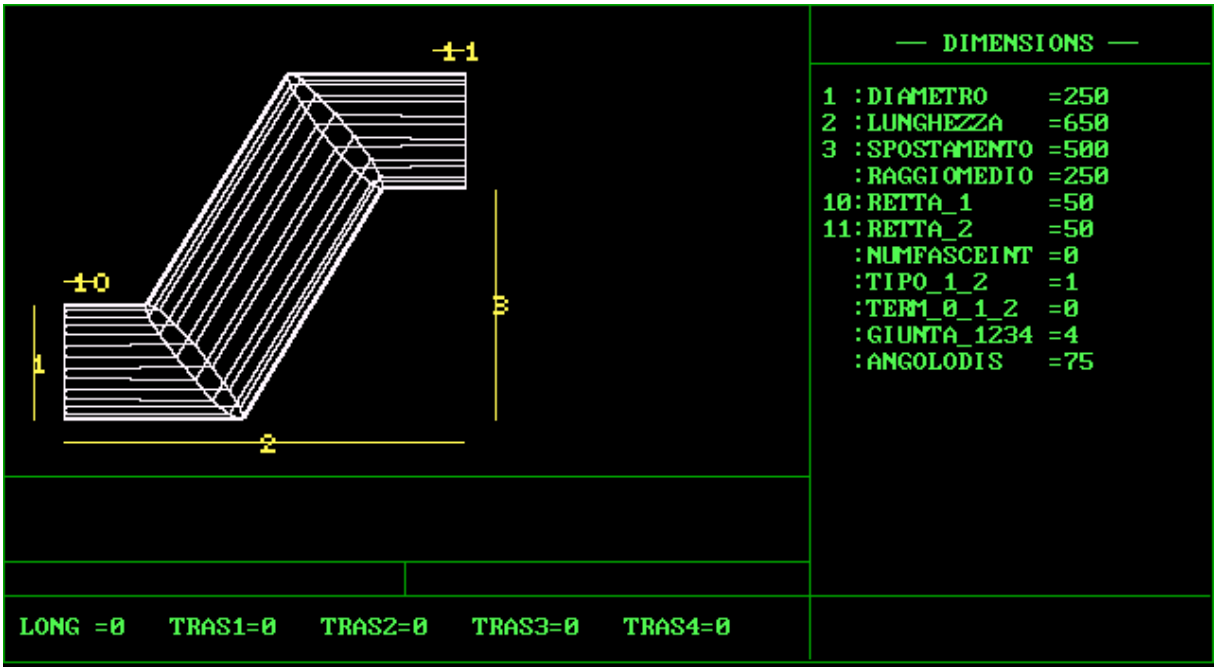
11
10
1
3
2
— DIMENSIONS —
1 :DIAMETRO =250
2 :LUNGHEZZA =650
3 :SPOSTAMENTO =500
:RAGGIOMEDIO =250
10:RETTA_1 =50
11:RETTA_2 =50
:NUMFASCEINT =0
:TIPO_1_2 =1
:TERM_0_1_2 =0
:GIUNTA_1234 =4
:ANGOLODIS =75
LONG =0 TRAS1=0 TRAS2=0 TRAS3=0 TRAS4=0

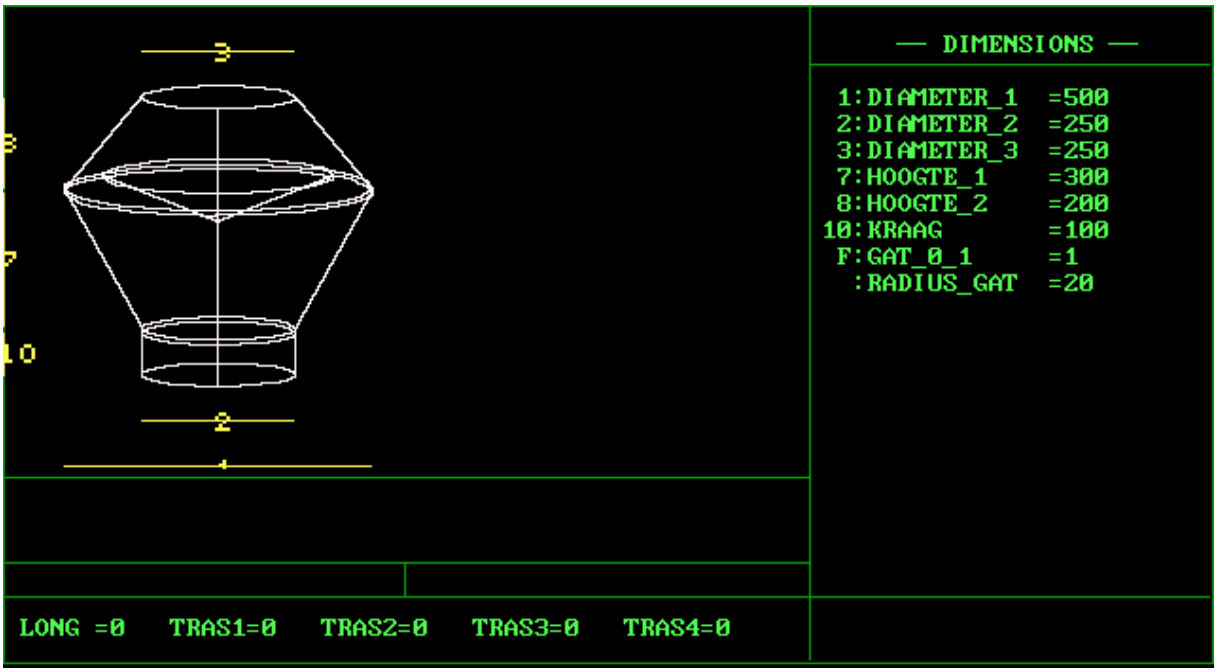
3
2
— DIMENSIONS —
1:DIAMETER_1 =500
2:DIAMETER_2 =250
3:DIAMETER_3 =250
7:HOOGTE_1 =300
8:HOOGTE_2 =200
10:KRAAG =100
F:GAT_0_1 =1
:RADIUS_GAT =20
LONG =0 TRAS1=0 TRAS2=0 TRAS3=0 TRAS4=0

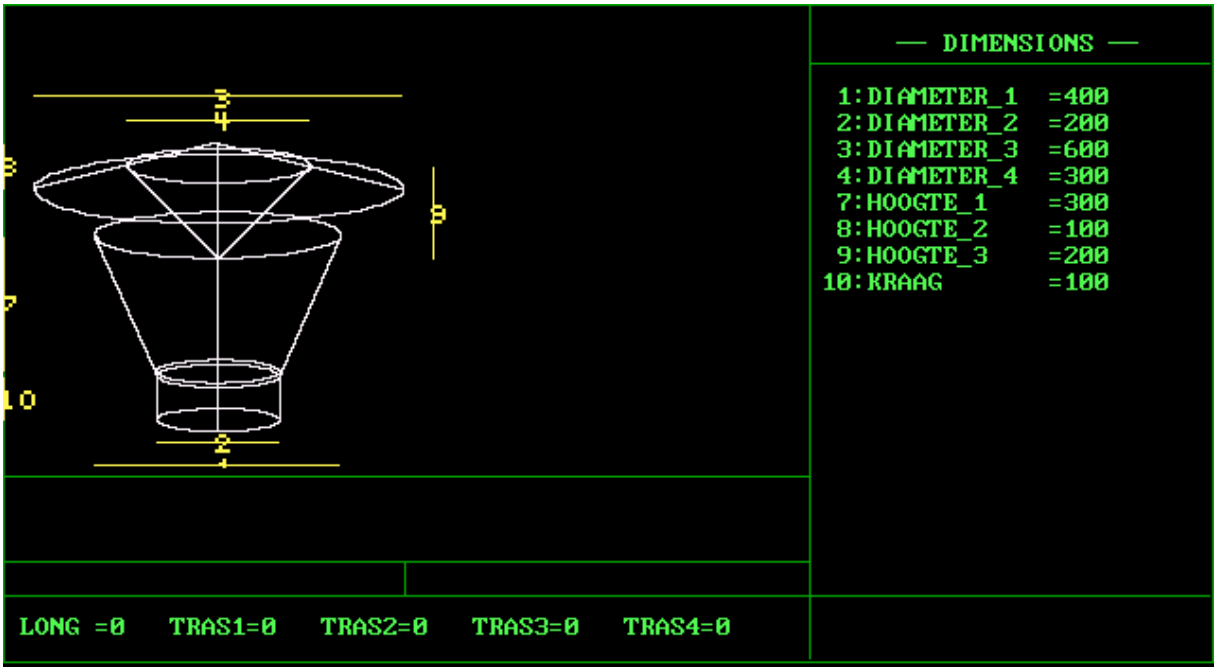
— DIMENSIONS —
1:DIAMETER_1 =400
2:DIAMETER_2 =200
3:DIAMETER_3 =600
4:DIAMETER_4 =300
7:HOOGTE_1 =300
8:HOOGTE_2 =100
9:HOOGTE_3 =200
10:KRAAG =100
LONG =0 TRAS1=0 TRAS2=0 TRAS3=0 TRAS4=0